NOVA LUCE

Supplier's name or trade mark: NOVA LUCE S.A
Supplier's address: SCHIMATARI VIOTIAS 32009, GREECE
Model identifier: 9175513
Type of light source: LED GU10 Bulb Excluded

Product information Sheet

General Information

Material number	**9175513**
Type	**Spot**
Product segment	**Technical**

Dimensions

Diameter (in cm)	
Length	**8Cm**
Width (in cm)	**8Cm**
Height 1 (in cm)	**9Cm**
Height 2 (in cm)	
Cut Out	

Material & Colour

Enclosure Material	**Aluminium**
Colour	**Sandy White**
Adjustable	

Functionality

Switch Type	
Function	
Battery	
USB Charger	
Driver	
Dimmable	

Technical Information

Protection Degree	**IP20**
Protection Class	
max. Volt	**220-240V**
max. Wattage	**1x10W**
Lumen	
Equivalence With Incandescent Lamp (W)	
Colour Temperature	
Nominal Lifetime (in h)	
Switching Cycles	
Colour Rendering Index (Ra, CRI)	
Rated Lamp Power (0,1W precision)	
Colour Tolerance (LED, SDCM)	
Mα	
Beam Angle	
UGR	

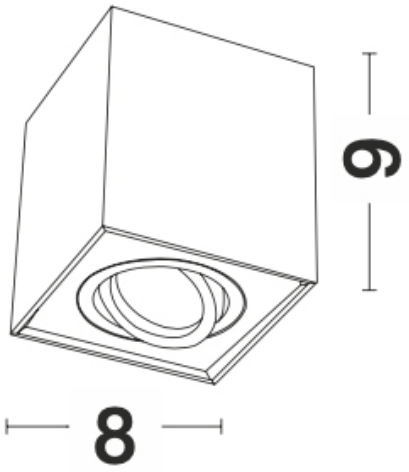

5 212017 417503

Contact | Support
www.novaluce.com